ELECTROPULS® E3000 | LINEAR-TORSION ALL-ELECTRIC DYNAMIC TEST INSTRUMENT

The ElectroPuls® E3000 Linear-Torsion is a state-of-the-art, all-electric test instrument designed for dynamic and static testing on a wide range of materials and components. It includes Instron® advanced digital control electronics, bi-axial Dynacell™ load cell, Console software, and the very latest in testing technology – hassle-free tuning based on specimen stiffness, electrically operated crosshead lifts, a T-slot table for flexible test set ups and a host of other user-orientated features. Powered from a single-phase supply it requires no additional utilities for basic machine operation (for example, pneumatic air, hydraulics, or water).



FEATURES

- Oil-Free linear and rotary motor technology for clean conditions
- De-coupled linear/rotary actuators
- Designed for both dynamic and static testing on a variety of materials and components
- High dynamic performance, capable of performing at over 100 Hz
- ±3000 N dynamic linear load capacity and ±25 Nm dynamic torque capacity
- Electrically powered from single phase main supply, no need for hydraulic or pneumatic air supplies
- Temperature-controlled air-cooling system
- High-stiffness, precision-aligned twin column load frame with actuator in upper crosshead
- Versatile T-slot table for regular and irregular grips and specimens
- Compact instrument - frame requires less than 0.3 m^2 (3.2 ft^2) of desk space

HARDWARE AND SOFTWARE INTERFACES DESIGNED TO PUT YOU IN CONTROL

- Console software control interface - engineered with Instron's knowledge of machine usability
- Rigidly mounted control pod with critical controls and emergency stop at your fingertips
- Electrically powered crosshead lift system with manual lever clamps for ease of test space adjustment
- System Status Indicator shows system conditions (off, on, emergency stop, and fault)

HIDDEN TECHNOLOGY DESIGNED TO IMPROVE YOUR TEST

- Patented, stiffness-based loop tuning system in both axes
- Unique actuator bearing system that maintains load string alignment when offset or lateral loads are induced by specimens or fixtures
- An optical encoder for precise digital extension control and a dedicated position channel for set up and end of test
- Digital two-axis control based on the industry's most advanced controller
- Dynacell advanced load cell technology for faster testing and reduction of inertial errors

A HIGH LEVEL OF VERSATILITY

- Readily adjustable test space to suit a wide variety of specimens, grips, fixtures, and accessories
- 60 mm (2.36 in) linear stroke, ±135° or ±16 revolutions, for a wide range of tests, as well as ease of specimen set up
- Twin column configuration provides easy access to the test area
- Compatible with WaveMatrix™3, Bluehill® Universal* and Application Specific software
- Compatible with a large range of grips, fixtures, chambers, saline baths, video extensometers, and other accessories

*Only supported in desktop mode

INSTRON®
The difference is measurable®

SPECIFICATIONS

Linear Dynamic Capacity	±3000 N (±675 lbf)
Linear Static Capacity	±2100 N (±472 lbf)
Torsional Dynamic	±25 Nm (±221 in-lb)
Torsional Static Capacity	±18 Nm (±157 in-lb)
Stroke	60 mm (2.36 in)
Rotation	±135˚ or ±16 revolutions; user configurable
Load and Torque Weighing Accuracy	±0.5 % of indicated load or torque, or ±0.005 % of load cell capacity, whichever is greater
Daylight Opening	861 mm (34 in) maximum with actuator at mid stroke
Configuration	Twin-column with actuator in upper crosshead
Mounting	Tabletop: Vertical
Lift and Locks	Electrically powered lifts with manual lever clamps
Load Cell	±5 kN ±25 Nm Dynacell™
Weight	250 kg (551 lb) [frame] 70 kg (154 lb) [controller]
Electrical Supply	200 VAC to 240 VAC 32A single phase 50/60 Hz
Cooling	Temperature-controlled air cooling
Operating Temperature	+10 to +30˚C (+50 to +86˚F)

INTERFACES

Actuator	3 x M6 on 75 mm PCD 3 x M6 on 57 mm PCD
T-Slot Table	M6 x 1 right hand central thread 3 x M6 holes on 75 mm PCD 3 x M6 holes on 57 mm PCD 6 x M10 holes on 100 mm PCD 3 x M10 holes on 125 mm PCD 4 x M10 holes on a 280 mm x 90 mm accessory rectangle 4 x M6 T-slots spaced 80 mm and 100 mm from centre

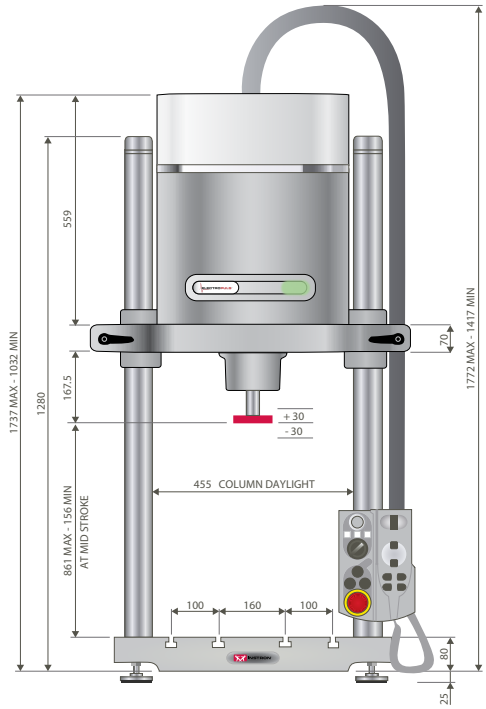

E3000 dimensions: front view

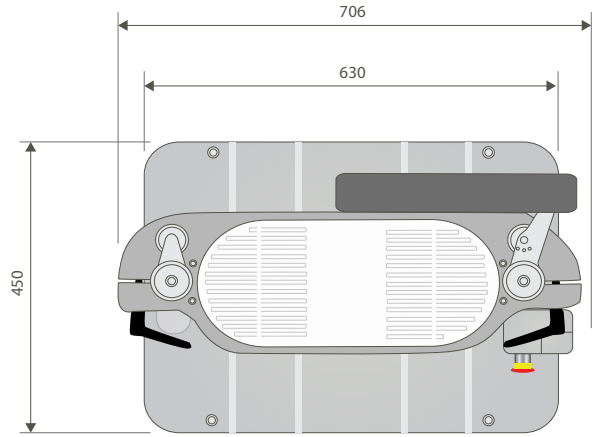

E3000 dimensions: plan view

ACCESSORIES

1300-304	Safety Screen for E3000 test instrument
1300-311	High stiffness table
2527-203	±1 kN (225 lbf) ±25 Nm (220 in-lb) Biaxial Dynacell
2742-205	±3 kN ±25 Nm Linear-Torsion Pneumatic Wedge-Action Grips
2742-206	±3 kN ±25 Nm Linear-Torsion Mechanical Wedge-Action Grips
2810-500	3-Point Bend Fixture
2810-505	4-Point Bend Fixture Conversion Kit
2840-030	20 kN Compression Platens
3117-082	ElectroPuls Pullrod kit
3119-605[1]	Environmental Chamber
2718-013	Pneumatic Grip Air Kit for Dynamic Systems

Notes: 1. Requires Pull-rods & Mounting Brackets

www.instron.com

INSTRON

Worldwide Headquarters
825 University Ave, Norwood, MA 02062-2643, USA
Tel: +1 800 564 8378 or +1 781 575 5000

European Headquarters
Coronation Road, High Wycombe, Bucks HP12 3SY, UK
Tel: +44 1494 464646

Instron is a registered trademark of Illinois Tool Works Inc. (ITW). Other names, logos, icons and marks identifying Instron products and services referenced herein are trademarks of ITW and may not be used without the prior written permission of ITW. Other product and company names listed are trademarks or trade names of their respective companies. Copyright © 2023 Illinois Tool Works Inc. All rights reserved. All of the specifications shown in this document are subject to change without notice.